Class I, Div 2 certified low-frequency accelerometer

786-500-D2

Wilcoxon's top-exit broadband sensor is certified for usage in hazardous areas. The high-sensitivity accelerometer offers an interior sensing element capable of producing 500 mV/g outputting clear signals at low vibration levels. The low-end frequency response makes it ideal for slow-speed applications such as wind turbine generators and cooling towers. A high top-end frequency response offers clear signals for early bearing fault detection, gear-box wear, and other high-speed applications.

The 786-500-D2 is classifed for usage in Class I Division 2/Zone 2 locations where ignitable gases, vapors or liquids are handled, processed or used but are not usually present during normal operation and can only escape through accidental rupture, breakdown or leaks.

Connections	
Function	Connector pin
ground	shell
power/signal	A
common	B

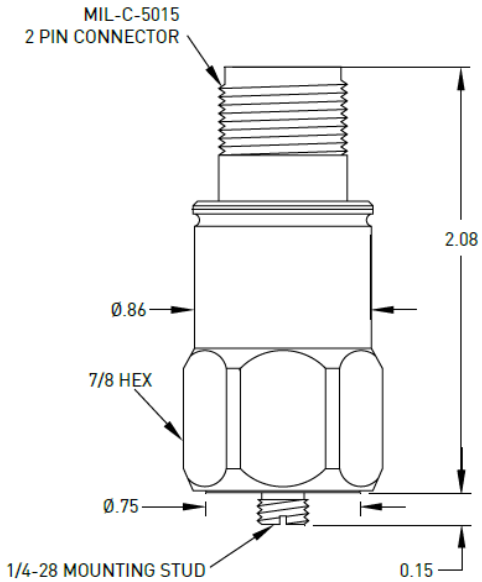

Key features

- High sensitivity
- Extended low frequency response
- Clear signals at low vibration levels
- Class I, Div 2/Zone 2 certified, non-incendive
- Hermetically sealed
- ESD protected
- Reverse wiring protection
- Manufactured in an approved ISO 9001 facility

Certifications

C US

Class I, Div 2
Groups A, B, C, D

Ex nA II T4 Gc

CE

Note: Due to continuous process improvement, specifications are subject to change without notice.
This document is cleared for public release.

Wilcoxon Sensing Technologies
20511 Seneca Meadows Parkway
Germantown, MD 20876
info@wilcoxon.com

Tel: (301) 330 8811
Fax: (301) 330 8873
www.wilcoxon.com

Wilcoxon Sensing Technologies
An Amphenol Company

99066 Rev. B 08/17

Class I, Div 2 certified low-frequency accelerometer

786-500-D2

SPECIFICATIONS

	English	Metric
Sensitivity, ±5%, 25° C	500 mV/g	49 mV/m/sec^2
Acceleration range, VDC > 22V	10 g peak	98 m/sec^2 peak
Amplitude nonlinearity	1%	1%
Frequency response[1]:		
± 5%	42 - 300,000 CPM	0.7 - 5,000 Hz
± 10%	30 - 540,000 CPM	0.5 - 9,000 Hz
± 3 dB	12 - 600,000 CPM	0.2 - 10,000 Hz
Resonance frequency	1,800 kCPM	30 kHz
Transverse sensitivity, max	5% of axial	5% of axial
Temperature response:		
–25° C	–10%	–10%
+120° C	+10%	+10%
Power requirement:		
Voltage source	18 - 30 VDC	18 - 30 VDC
Current regulating diode	2 - 10 mA	2 - 10 mA
Electrical noise, equiv. g:		
Broadband 2.5 Hz to 25 kHz	250 µg	2.4 x 10^{-3} m/sec^2
Spectral 10 Hz	2.5 µg/√Hz	2.4 x 10^{-5} m/sec^2/√Hz
100 Hz	1.5 µg/√Hz	1.5 x 10^{-5} m/sec^2/√Hz
1,000 Hz	1.5 µg/√Hz	1.5 x 10^{-5} m/sec^2/√Hz
Output impedance, max	100 Ω	100 Ω
Bias output voltage	12 VDC	12 VDC
Grounding	case isolated, internally shielded	
Temperature range	–58 to +248° F	–50 to +120° C
Vibration limit	500 g peak	4,900 m/sec^2 peak
Shock limit	5,000 g peak	49,000 m/sec^2 peak
Electromagnetic sensitivity, equiv g, max	70 µg/gauss	6.9 x 10^{-4} m/sec^2/gauss
Sealing	hermetic	
Base strain sensitivity, max	0.0002 g/µstrain	1.9 x 10^{-3} m/sec^2/µstrain
Sensing element design	PZT, shear	
Weight	3.17 oz	90 grams
Case material	316L stainless steel	
Mounting	1/4-28 UNF tapped hole	
Output connector	MIL-C-5015 style, 2-pin	
Recommended cabling	J10 / J9T2A	

Note: Due to continuous process improvement, specifications are subject to change without notice.
This document is cleared for public release.

Contact

Wilcoxon Sensing Technologies

20511 Seneca Meadows Parkway
Germantown MD 20876, USA

Tel: +1 301 330 8811
Fax: +1 301 330 8873

info@wilcoxon.com

www.wilcoxon.com

Accessories supplied:

- Calibration data (level 2)
- SF6M mounting stud

Notes: [1] Frequency response limits, spectral and noise values are typical.